THERMOWELLS

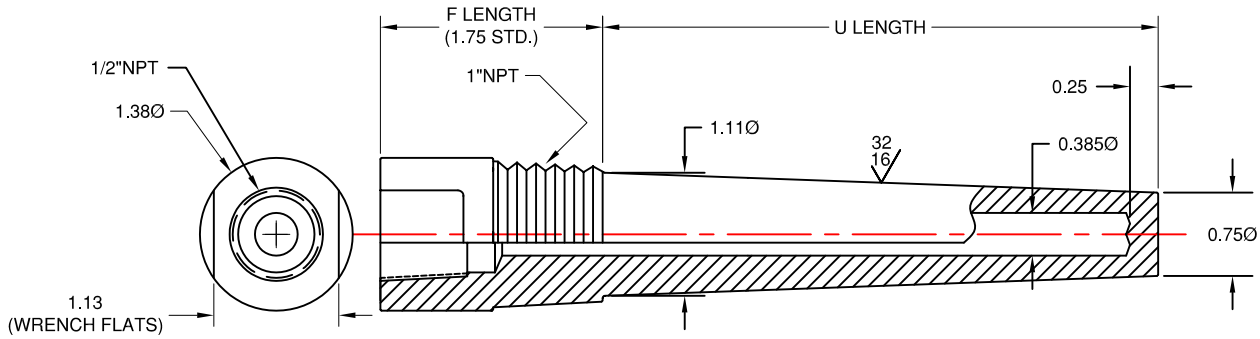

TYPE 24

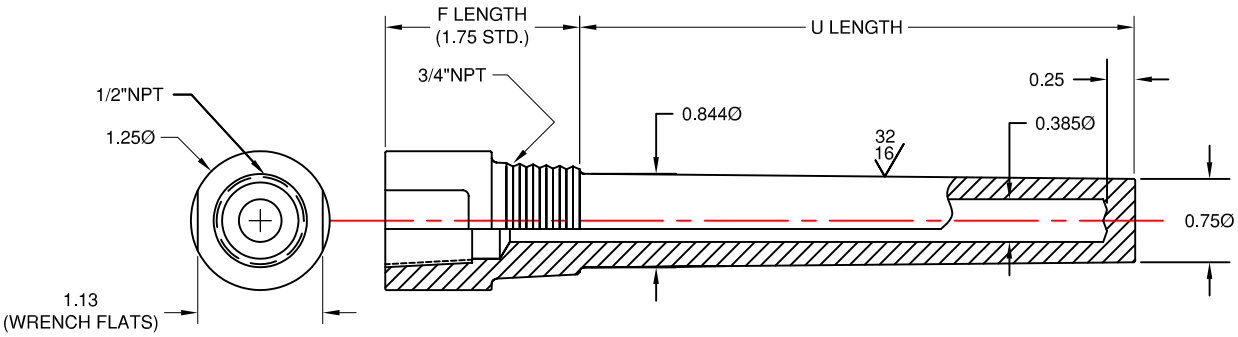

TYPE 25

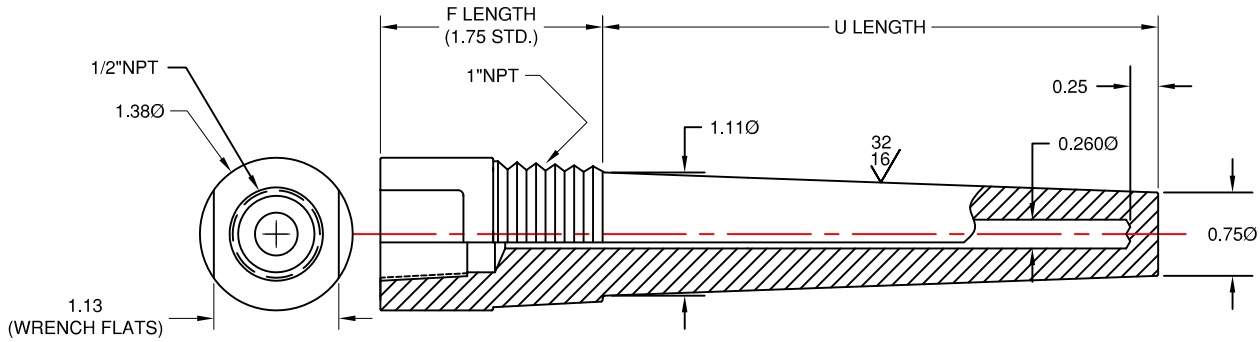

TYPE 241

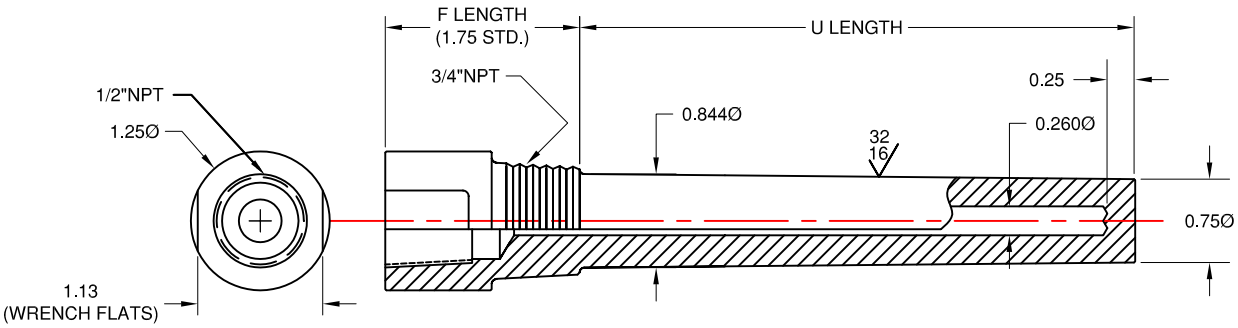

TYPE 251

STANDARD TOLERANCES

U LENGTH
12" or Less ±.063
12" or Over ±.13
F LENGTH
±.25
STEM DIAMETER
±.015
BORE DIAMETER
+.005/-.003
END THICKNESS
±.063

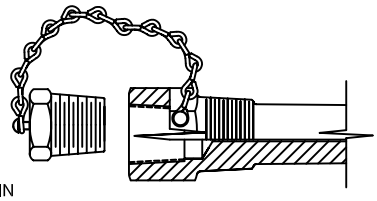

PLUG & CHAIN
Prevent foreign matter from entering test wells when not in use. Plugs are available in Brass or Stainless Steel. A captive chain is attached to prevent loss.
To order as a test well specify plug & chain code letters after well ordering code.

CODE	PLUG & CHAIN
-BPC	BRASS
-SSPC	STN. STL.

ORDERING CODE

TW [ ][ ][ ] – [ ]

CODE	THERMOWELL TYPE
	(INSERT WELL TYPE)

CODE	WELL MATERIAL
Y	446 STN. STL.
H	HASTELLOY C276
L	MONEL 400
J	INCONEL 600
Q	310 STN. STL.
(F11)	1.25%CR - .5%MO
(F22)	2.25%CR - 1%MO

CODE	F LENGTH
	(IN INCHES)

CODE	U LENGTH
	(IN INCHES)

THERMO ELECTRIC

TEMPERATURE MEASUREMENT DESIGNER'S GUIDE
WWW.THERMO-ELECTRIC-DIRECT.COM

SECTION TWPT

DRILLED THREADED THERMOWELLS
TAPERED SHANK, ALLOY MATERIALS

The information contained hereon shall be considered the sole property of Thermo Electric Company, Inc. The recipient thereof agrees not to disclose or reproduce said information to parties outside the recipients organization without the written permission of Thermo Electric.

Doc. No.: TE-CO010109-TWPT-050