THERMOWELLS

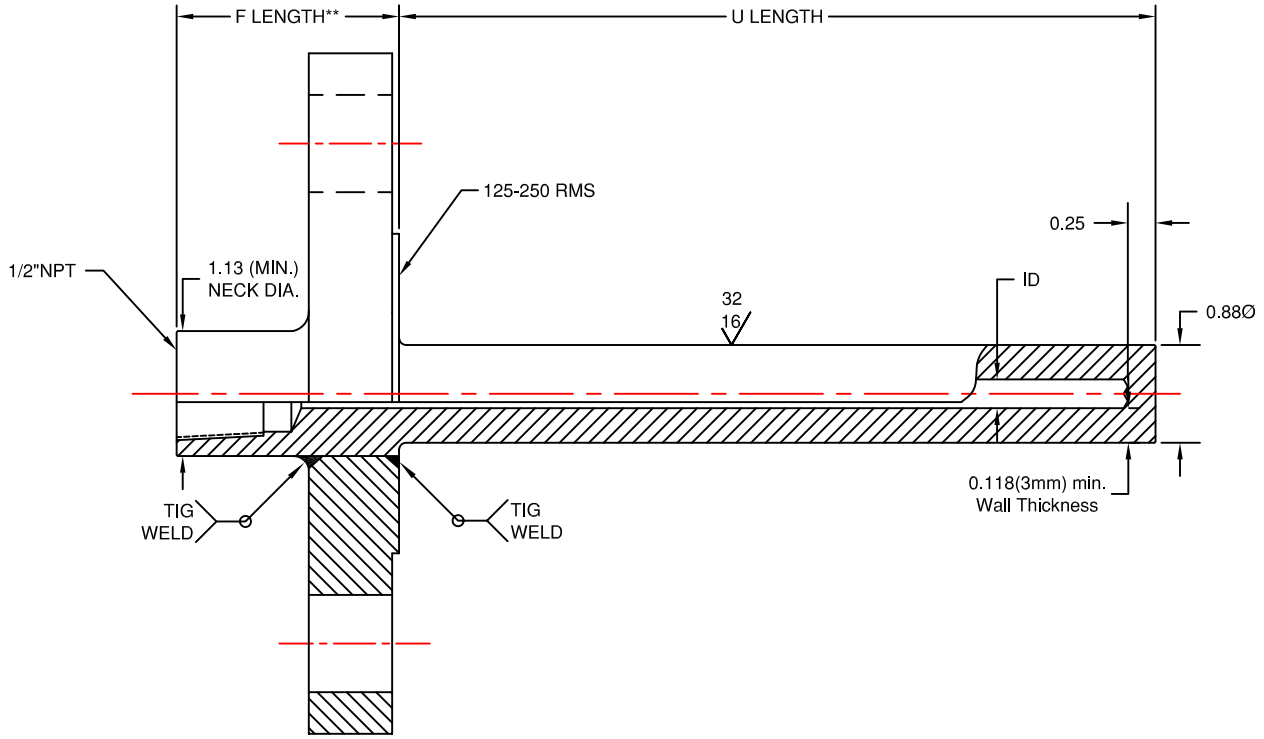

TYPE 42
TYPE 43

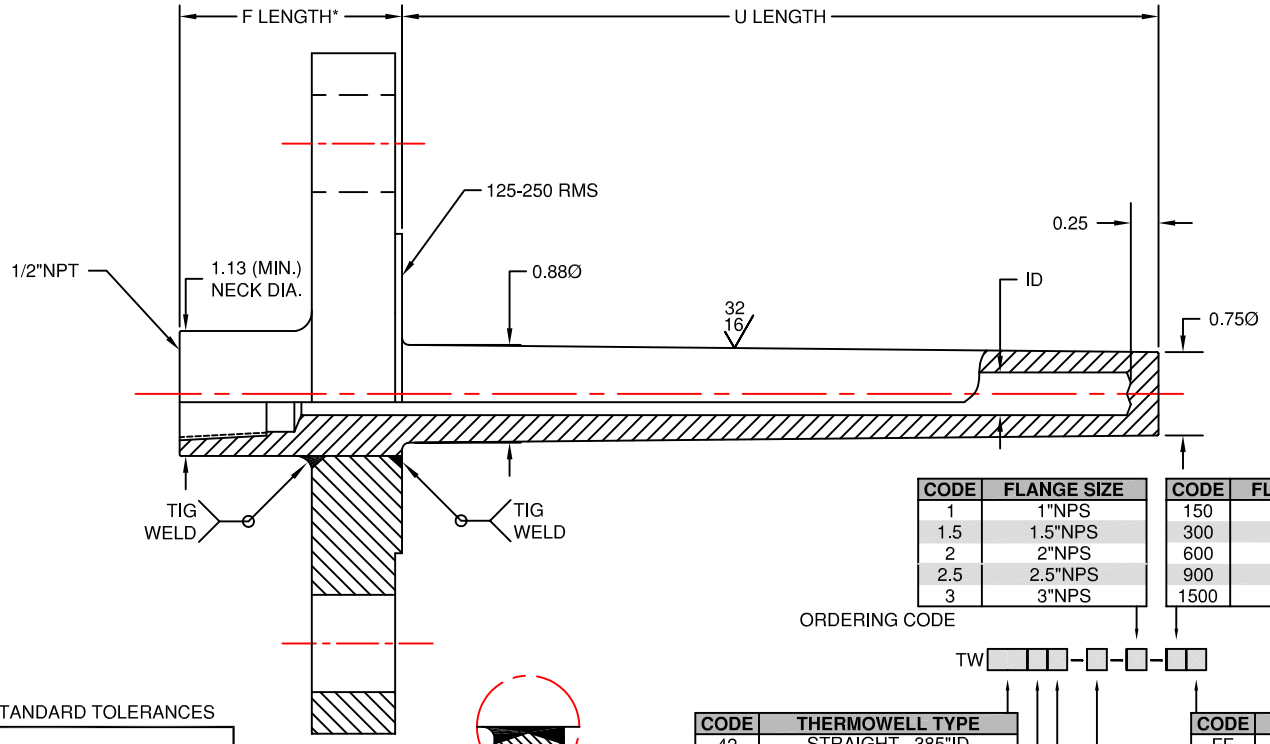

TYPE 47
TYPE 48

CODE	FLANGE SIZE
1	1"NPS
1.5	1.5"NPS
2	2"NPS
2.5	2.5"NPS
3	3"NPS

CODE	FLANGE RATING
150	150 LBS.
300	300 LBS.
600	600 LBS.
900	900 LBS.
1500	1500 LBS.

ORDERING CODE

TW [ ][ ][ ] – [ ] – [ ] – [ ][ ]

STANDARD TOLERANCES

U LENGTH
12" or Less ±.063
12" or Over ±.13
F LENGTH
±.25
STEM DIAMETER
±.015
BORE DIAMETER
+.005/-.003
END THICKNESS
±.063

OPTIONAL
FULL PENETRATION WELD
(Add (FP) to end of Ordering Code)

PLUG & CHAIN
Prevent foreign matter from entering test wells when not in use. Plugs are available in Brass or Stainless Steel. A captive chain is attached to prevent loss.
To order as a test well specify plug & chain code letters after well ordering code.

CODE	PLUG & CHAIN
-BPC	BRASS
-SSPC	STN. STL.

CODE	THERMOWELL TYPE
42	STRAIGHT, .385"ID
43	STRAIGHT, .260"ID
47	TAPERED, .385"ID
48	TAPERED, .260"ID

CODE	WELL MATERIAL
P	304 STN. STL.
R	316 STN. STL.
PLorRL	304 or 316L STN. STL.
(F11)	1.25% CR. - .5 MO.
N	CARBON STEEL

CODE	F LENGTH*
	(IN INCHES)

CODE	U LENGTH
	(IN INCHES)

CODE	FLANGE TYPE
FF	FLAT FACE
RF	RAISED FACE
RJ	RING JOINT

*2" Minimum Length For Flanged Thermowells, May Be Longer For Larger Flange Sizes.

THERMO ELECTRIC

TEMPERATURE MEASUREMENT DESIGNER'S GUIDE
WWW.THERMO-ELECTRIC-DIRECT.COM

SECTION TWPT

DRILLED FLANGED THERMOWELLS
TAPERED & STRAIGHT SHANK

The information contained hereon shall be considered the sole property of Thermo Electric Company, Inc. The recipient thereof agrees not to disclose or reproduce said information to parties outside the recipients organization without the written permission of Thermo Electric.

Doc. No.: TE-CO010109-TWPT-070